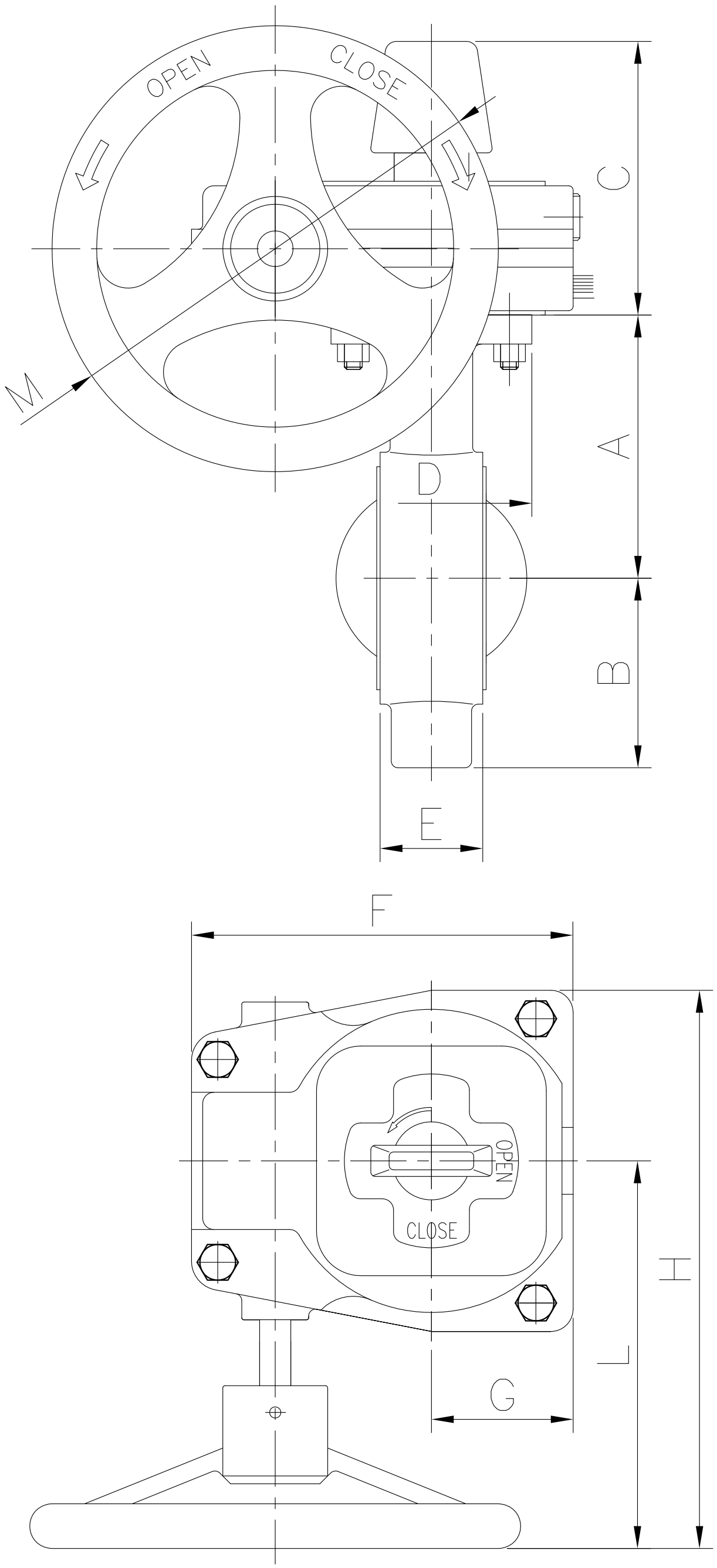
OPEN
CLOSE
M
C
A
D
B
E
F
OPEN
CLOSE
H
L
G

Wafer Butterfly Valve
Gear Operated, 300PSI

FIG · F0811 – 300

Specifications

- Single piece through shaft.
- Vulcanized seat design for bubble-tight shutoff at 300 psi.
- Flag type position indicator.
- Low torque operation, high cycle life.
- With built-in supervisory switch.
- Top flange to ISO 5211/1.
- Flanges to ANSI B16. 1 Class125, EN1092-2 PN10/16. (Other types available upon request)
- UL/ULC Listed.
- FM Approved for size 2"-8".
- GOST Certification.

Working Pressure

- 300PSI.
- 200PSI and 250PSI available on request.

Working Temperature

- -10°C to 82°C.

Corrosion Protection

- Fusion Bonded Epoxy Coated Interior and Exterior to AWWA C550 Standard.

Notes:

Design and material are subject to change without notice.

Material Specifications

Part Name	Material	ASTM Spec.
Body	Ductile Iron	A536 65-45-12
Seat	Rubber	EPDM
Disc	Ductile Iron	A536 65-45-12
Shaft	Stainless Steel	AISI 431
Bushing	Brass	C67400
Gearbox Housing	Cast Iron	A126 Class B
Gearbox Cover	Cast Iron	A126 Class B
Wormgear	Bronze	C62300
Worm	Stainless Steel	AISI 316
Handwheel	Cast Iron	A126 Class B

Dimensions (mm/inch)

Size	A	B	D	E	C	F	G	H	L	M
2″	110 4. 33	74 2. 91	90 3. 54	43 1. 69	120 4. 72	170 6. 69	65 2. 56	155 6. 10	150 5. 91	200 7. 87
2. 5″	118 4. 65	85 3. 35	90 3. 54	46 1. 81	120 4. 72	170 6. 69	65 2. 56	155 6. 10	150 5. 91	200 7. 87
3″	130 5. 12	95 3. 74	90 3. 54	46 1. 81	120 4. 72	170 6. 69	65 2. 56	155 6. 10	150 5. 91	200 7. 87
4″	145 5, 71	115 4. 53	90 3. 54	52 2. 05	120 4. 72	170 6. 69	65 2. 56	155 6. 10	150 5. 91	200 7. 87
5″	160 6. 30	130 5. 12	90 3. 54	56 2. 20	120 4. 72	170 6. 69	65 2. 56	155 6. 10	150 5. 91	200 7. 87
6″	175 6. 89	145 5. 71	90 3. 54	56 2. 20	120 4. 72	170 6. 69	65 2. 56	155 6. 10	150 5. 91	200 7. 87
8″	200 7. 87	170 6. 69	125 4. 92	60 2. 36	160 6. 30	225 8. 86	85 3. 35	206 8. 11	200 7. 87	300 11. 81
10″	250 9. 84	208 8. 19	125 4. 92	68. 5 2. 70	160 6. 30	225 8. 86	85 3. 35	206 8. 11	200 7. 87	300 11. 81
12″	275 10. 83	238 9. 37	125 4. 92	79. 5 3. 13	160 6. 30	225 8. 86	85 3. 35	206 8. 11	200 7. 87	300 11. 81

Schematic

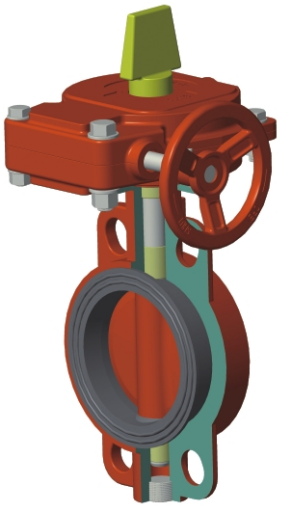

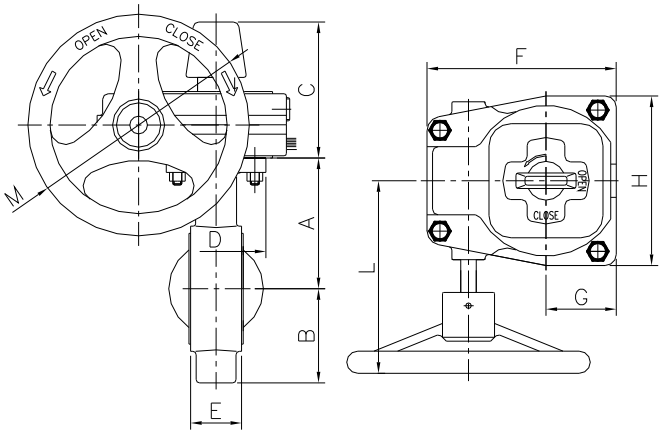

Installation sheet for Gear Operator With Tamper Switch

Butterfly valves are provided with internal supervisory position switches. The tamper switch operates by a cam connected to the valve stem. The switch will change position and close within two (2) full turns of the hand wheel from the fully open position.
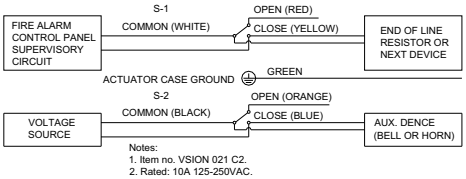
Switch #1:
For connection to the supervisory circuit
Normally closed: 2 Yellow
Normally open: 2 Red
Common: 2 White
Switch #2:
Auxiliary switch connected per authority
Normally closed: 1 Blue
Normally open: 1 Orange
Common: 1 Black
Ground Lead: 1 Green