SABA TAM SANAT
شرکت مهندسی صباتام صنعت

LISTED | APPROVED | Certified to NSF/ANSI 61

WEFLO®

FIG. F0738-260

Dry-Barrel Fire Hydrant



Specifications

- Meet or exceed the requirements of AWWA C502 Standard.
- NFPA 1963 Standard Nozzle Threads.
- Throat Packing with Duplex Stainless Steel Safety Stem Coupling.
- Excellent Flow Characteristics.
- Multiple Nozzle Configurations.
- Mechanical Joint Base Elbow.
- Dry Top Design with O-ring Sealed Oil Reservoir.
- Dual Anti-Frost Bronze Drain Valves as Standard.
- UL 246 Listed and FM 1610 Approved.
- Rated Working Pressure 250 PSI.
- Certified to NSF/ANSI 61 & 372.

Options

- Monitor Style Arm Elbow.
- Monitor Flange: ASTM B16.1 Class 125, Size 4" or 3".
- Flange Base Elbow.
- Multiple Nozzle Configurations.

Material Specification

Part	Material	ASTM Specification
Operating Nut	Bronze	B62 C83600
Hold Down Nut	Bronze	B62 C83600
Bonnet	Gray Cast Iron	A126 Class B
Bonnet Bolts and Nuts	Carbon Steel	A307 Grade B
Bonnet Gasket	Rubber	D2000 NBR
Nozzle	Bronze	B62 C83600
Nozzle Cap	Gray Cast Iron	A126 Class B
Nozzle Gasket	Rubber	D2000 NBR
Nozzle O-Ring	Rubber	D2000 NBR
Nozzle Outlet	Rubber	D2000 NBR
Cap Chain	Carbon Steel	A105
Standpipe Upper	Ductile Iron	A536 Grade 65-45-12
Safety Coupling	Duplex Stainless Steel	A890 1A/2205
Cotter Pin	Stainless Steel	A276 Type 304
Spring Pin	Stainless Steel	A276 Type 304
Spridy Flange	Gray Cast Iron	A126 Class B
Flange Bolts and Nuts	Carbon Steel	A307 Grade B
Standpipe Lower	Ductile Iron	A536 Grade 65-45-12
Upper Rod	Carbon Steel	A576 Grade B
Lower Rod	Carbon Steel	A576 Grade B
Valve Top Plate	Bronze	B62 C83600
Drain Valve Packing	Plastic	-
Seat Ring	Bronze	B62 C83600
Drain Ring	Bronze	B62 C83600

Schematic

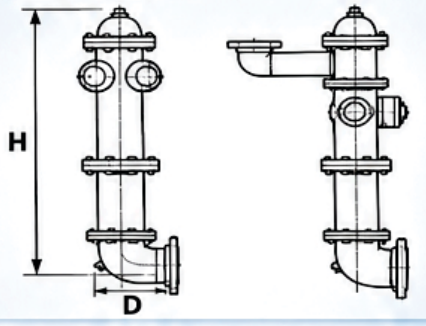

Buried Depth Dimensions (Inch)

Option	L (Buried Depth)
1	1' - 0"
2	2' - 0"
3	3' - 0"
4	3' - 6"
5	4' - 0"
6	4' - 6"
7	5' - 0"
8	5' - 6"
9	6' - 0"
10	6' - 6"
11	7' - 0"

Material Specifications

Part	Material	ASTM Specification
Finish Housing	Ductile Iron	A536 Grade 65-45-12
Main Valve	Rubber	D2000 NBR
Valve Bottom Plate	Ductile Iron	A536 Grade 65-45-12
Bottom Plate Nut	Ductile Iron	A536 Grade 65-45-12
Elbow	Ductile Iron	A536 Grade 65-45-12

Notes:

- Designs, materials and specifications shown are subject to change without notice due to the continuous development of our products.

021 22855818 | www.sabatam.com