SABA TAM SANAT

شرکت مهندسی صباتام صنعت

WEFLO®

UL LISTED

FM APPROVED

FIG. F0311

Water Butterfly Valve, Gear Operated



Specifications

- Meter or exceed the requirements of EN 593 and MSS SP-67 Standard.
- Single Piece Through Shaft.
- Splined Drive.
- Outdoor and Indoor Rated.
- Vulcanized Seat Design for Bubble-Tight Shutoff.
- Ring Type, Positive Isolation.
- Built-in Supervisory Switch.
- Face to Face Dimension complies with AAMI B16.10 Narrow and EN558 (Series 20).
- Connected Flange complies with ASME B16.5 Class 150 and EN1092 PN10/16, (Other Flange Types available upon request).
- UL/ULC 1091 Listed, FM 1112 Approved, VdS 2100-06 and 2100-08 Certified.
- Rated Working Pressure:
  300 psi for UL/ULC Listed
  300 psi for FM Approved
  16 bar for VdS and SD Certified.

Corrosion Protection

- Fusion Bonded Epoxy Coated interior and exterior to AWWA C550 Standard.

Material Specifications

Part	Material	ASTM Specification
Body	Ductile Iron	A536 Grade 65-45-12
Seat	Rubber EPDM	D2000
Disc	Ductile Iron	A536 Grade 65-45-12
Shaft	Stainless Steel	A276 Type 431
Bushing	Brass	B124 C37700
Housing	Gray Cast Iron	A126 Class B
Handwheel	Carbon Steel	A307 Grade B

Schematic

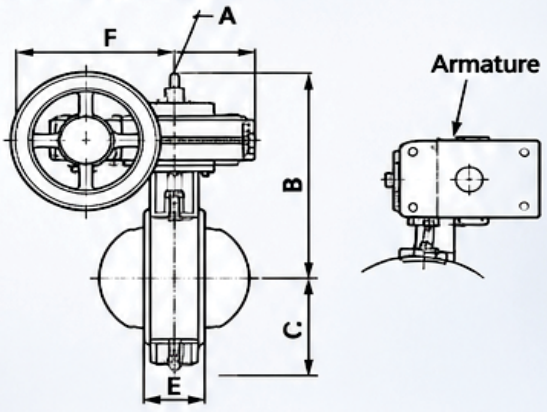

Main Dimensions (mm/inch)

Size		A		B		C		E		F		D	
DN	inch	mm	inch	mm	inch	mm	inch	mm	inch	mm	inch	mm	inch
50	2	232.00	9.13	742.31	29.22	437.69	17.23	150.74	5.93	150.74	5.93	1606.50	63.25
65	2.5	252.46	9.94	859.39	33.83	441.91	17.40	150.74	5.93	150.74	5.93	1606.50	63.25
80	3	283.46	11.16	958.78	37.75	484.91	19.09	150.74	5.93	150.74	5.93	1606.50	63.25
100	4	356.10	14.02	1166.18	45.91	522.06	20.55	150.74	5.93	150.74	5.93	1606.50	63.25
125	5	290.11	11.42	1306.10	51.42	662.16	26.07	213.84	8.42	213.84	8.42	1606.50	63.25
150	6	292.11	11.50	1426.70	56.17	662.18	26.07	213.84	8.42	213.84	8.42	1606.50	63.25
200	8	320.14	12.60	1706.70	67.19	662.89	26.10	203.81	8.02	203.81	8.02	2307.58	90.85
250	10	410.16	16.15	2106.50	82.93	652.70	25.70	203.81	8.02	203.81	8.02	2307.58	90.85
300	12	455.17	17.92	2406.60	94.75	763.16	30.05	203.81	8.02	203.81	8.02	2907.65	114.46

Notes:

- 3"–8" for 300 psi valves are UL/ULC Listed.
- Working, installation and specification information are subject to change without notice due to the continuous development of our products.

021 22855818 | www.sabatam.com